# FAULT DETECTION AND FAULT TOLERANT APPROACHES WITH AIRCRAFT APPLICATION

*2003 Louisiana Workshop on System Safety*

**Andrés Marcos**

Dept. Aerospace Engineering and Mechanics,
University of Minnesota

# Outline

* Motivation and basic concepts.
* Software and Model.
* Research Approaches: general notions and results.
* Conclusions.

# Motivation

Current technologies need automation and accident prevention.

Future technologies demand increased levels of reliability and safety.

DC-10 United Airlines Flight 232 accident, 19 July 1998.

# Basic Concepts

## Fault Detection and Isolation

Ability of a system to diagnose the effect, cause, severity and nature of abnormal behavior (i.e. faults and failures) in its components.

## Fault Tolerant Control

A closed-loop control system that tolerates component malfunctions while maintaining a desired degree of performance and stability.

# Basic Concepts

## Areas of Research

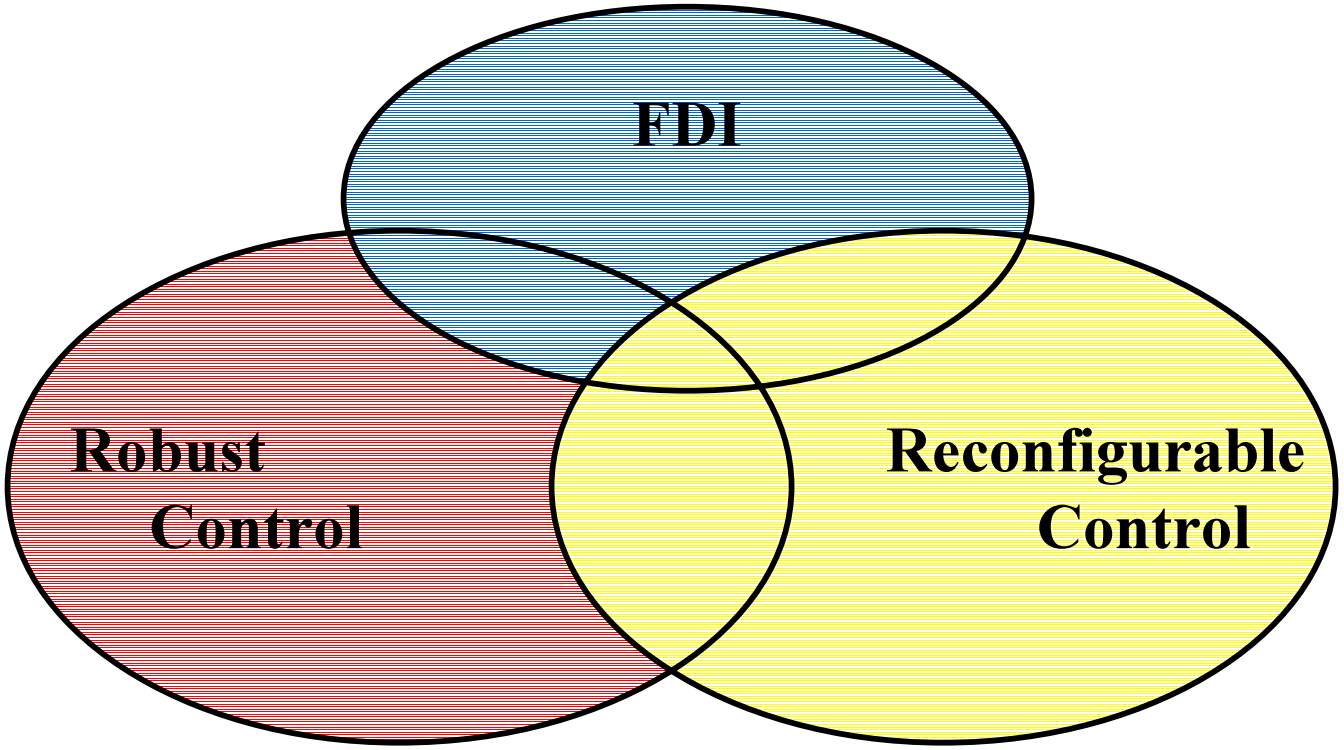


Patton, R.J. *Fault Tolerant Control Systems: the 1997 Situation.* SAFEPROCESS'97.

# Nonlinear Model

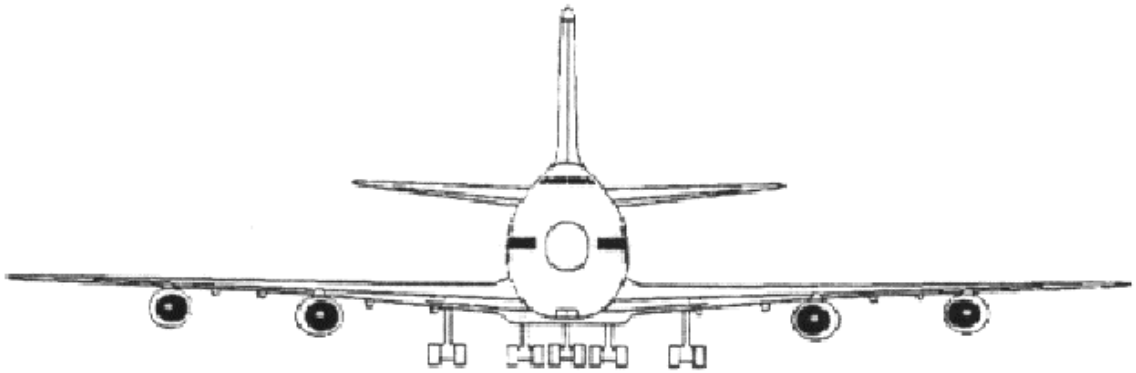

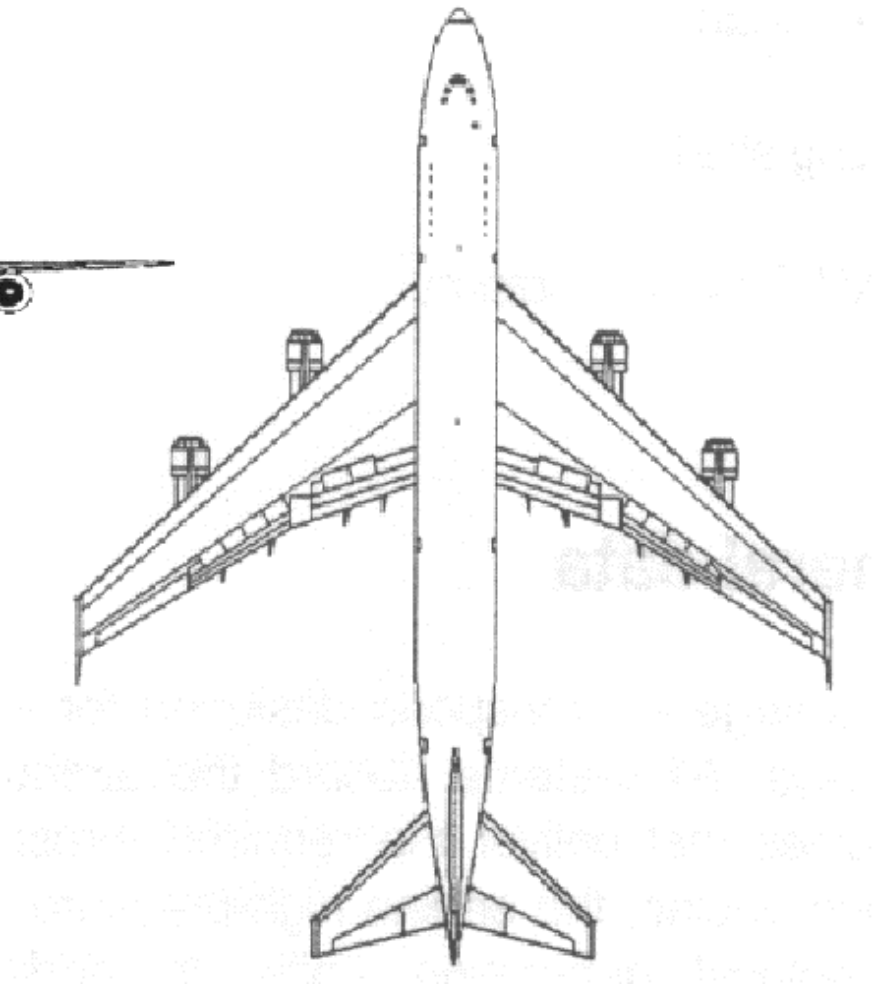

**Boeing 747-100/200 series:**

High-Fidelity Nonlinear Model.

Dryden Turbulence Filter.

Sensor Noise.

# Software

## State-of-the-Art Analysis Package

High Performance Simulation

Aircraft Trimming

Aircraft Model Linearisation

3D Visualization & Animation

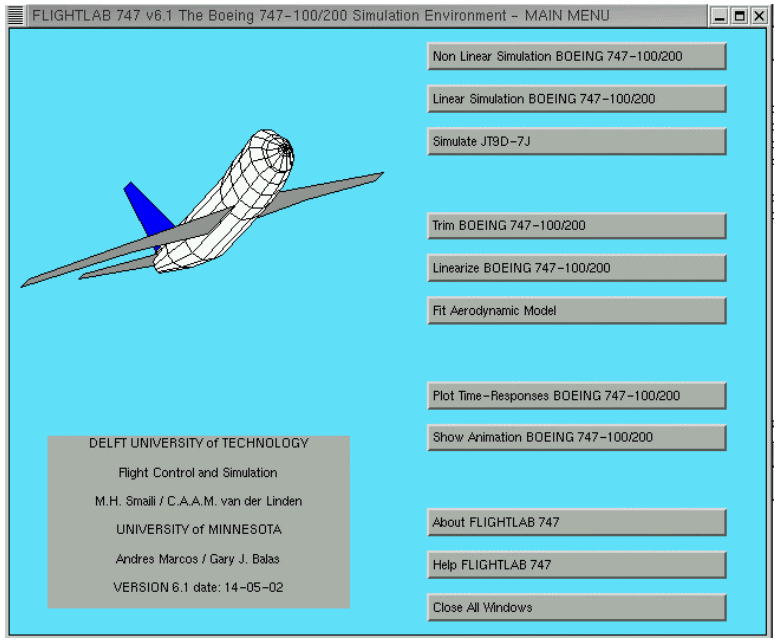


## Complete Simulink Model:

Full Nonlinear Equations of Motion

Aerodynamic Coefficients Model

Flight Control Model

Hydraulic System Architecture

Ground and Gear Effects

Cockpit to Control Surface relationship

# Research Approaches

**Fault Detection and Identification:**

1. Linear Time Invariant $H_\infty$ model matching Approach.
2. Linear Parameter Varying - Geometric Approach.

**Fault Tolerant Control:**

3. Linear Parameter Varying Approach (control allocation).

# FDI LTI $H_\infty$

## General Characteristics of the method:

* Model-based approach => reduced cost and complexity avoiding hardware redundancy.
* Explicit address of robustness.

## Particular characteristics of our approach:

* Open-Loop filter synthesis.
* De-coupling model-matching with disturbance rejection.
* Additive fault models: elevator actuator & pitch rate sensor.

# FDI LTI $H_\infty$ ( Objectives )

**Filter objectives:**

1. Find stable filter.

2. min $\left\| TF_{\hat{d} \to e} \right\|_\infty$ where $\hat{d} = \begin{bmatrix} \bar{d} & u \end{bmatrix}$

3. max $\left\| TF_{f \to e} \right\|_\infty$

4. Robust to modeling errors & uncertainty.

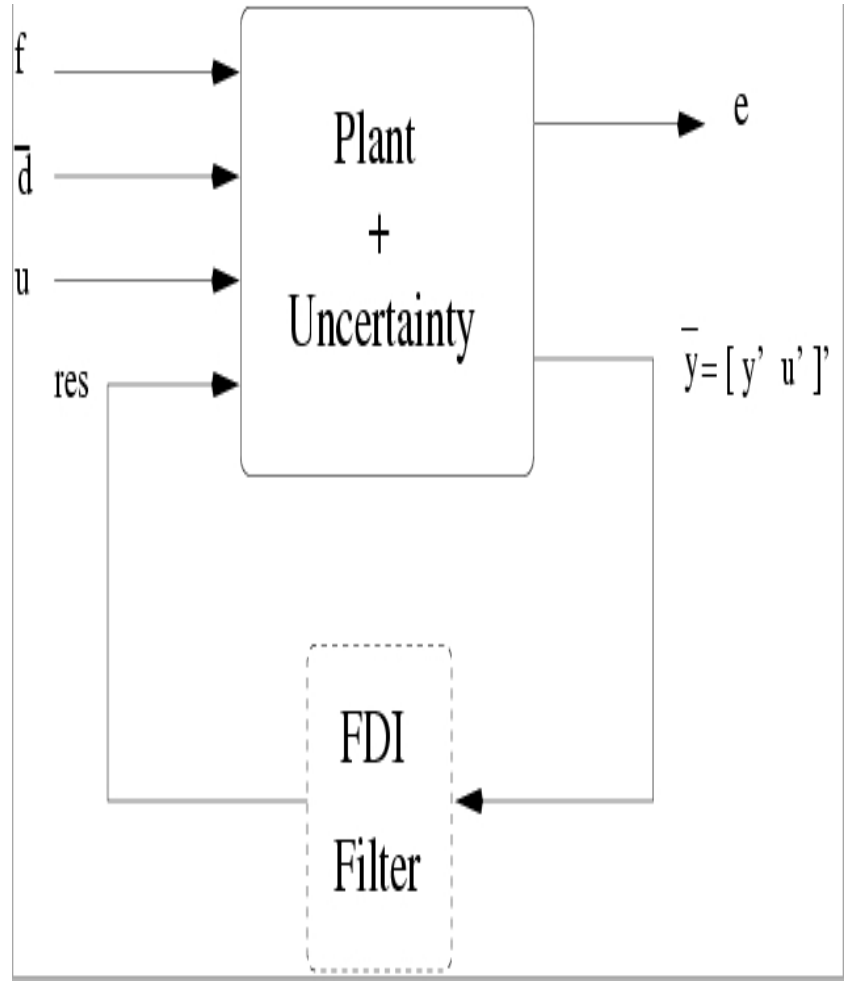

# FDI LTI $H_\infty$ ( Interconnection )

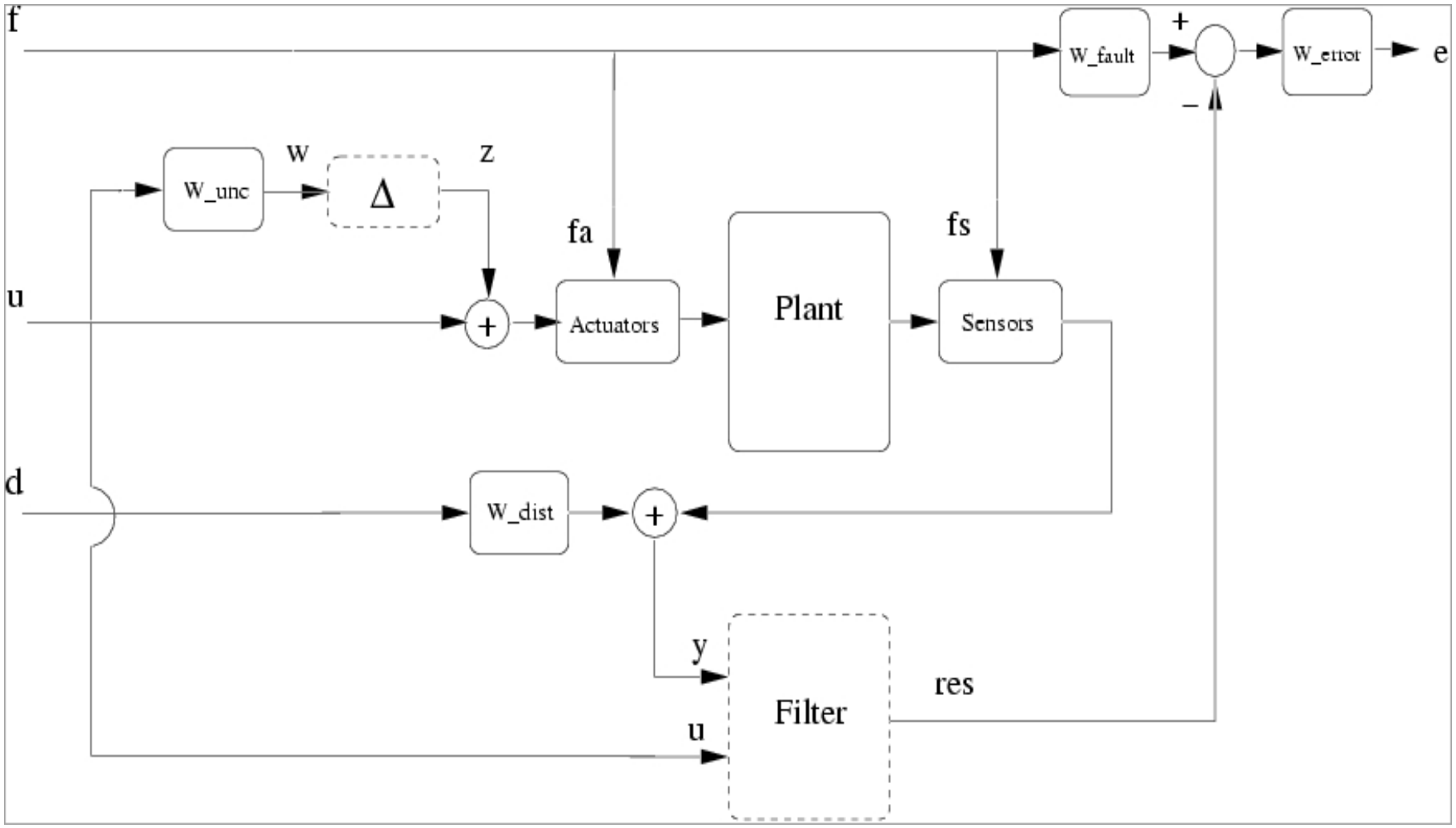

# FDI LTI $H_\infty$ ( Results I )

**Closed-Loop Nonlinear simulation with moderate gust and noise - Plant outputs.**

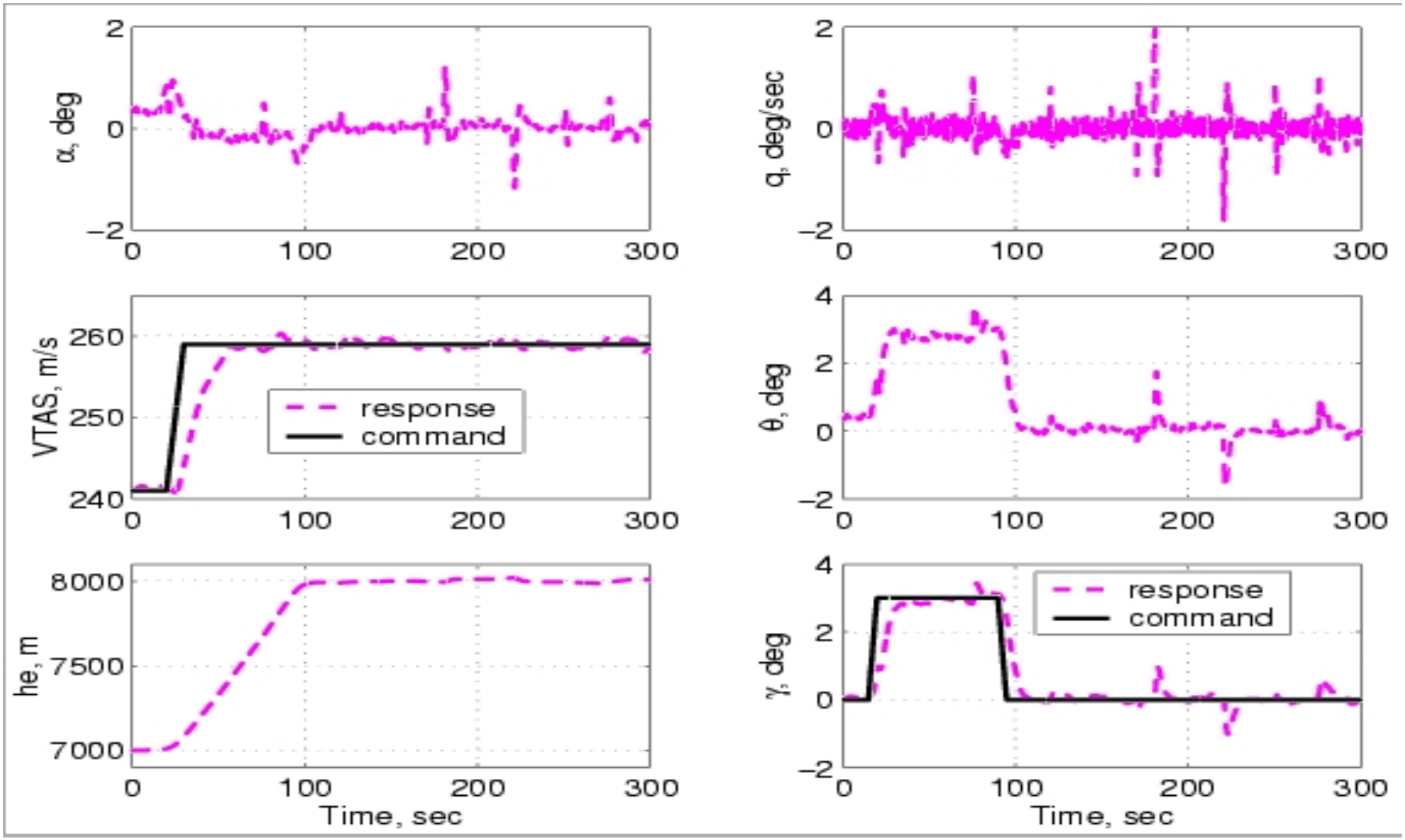

# FDI LTI $H_\infty$ ( Results II )

**Closed-Loop Nonlinear simulation with moderate gust and noise - Residuals.**

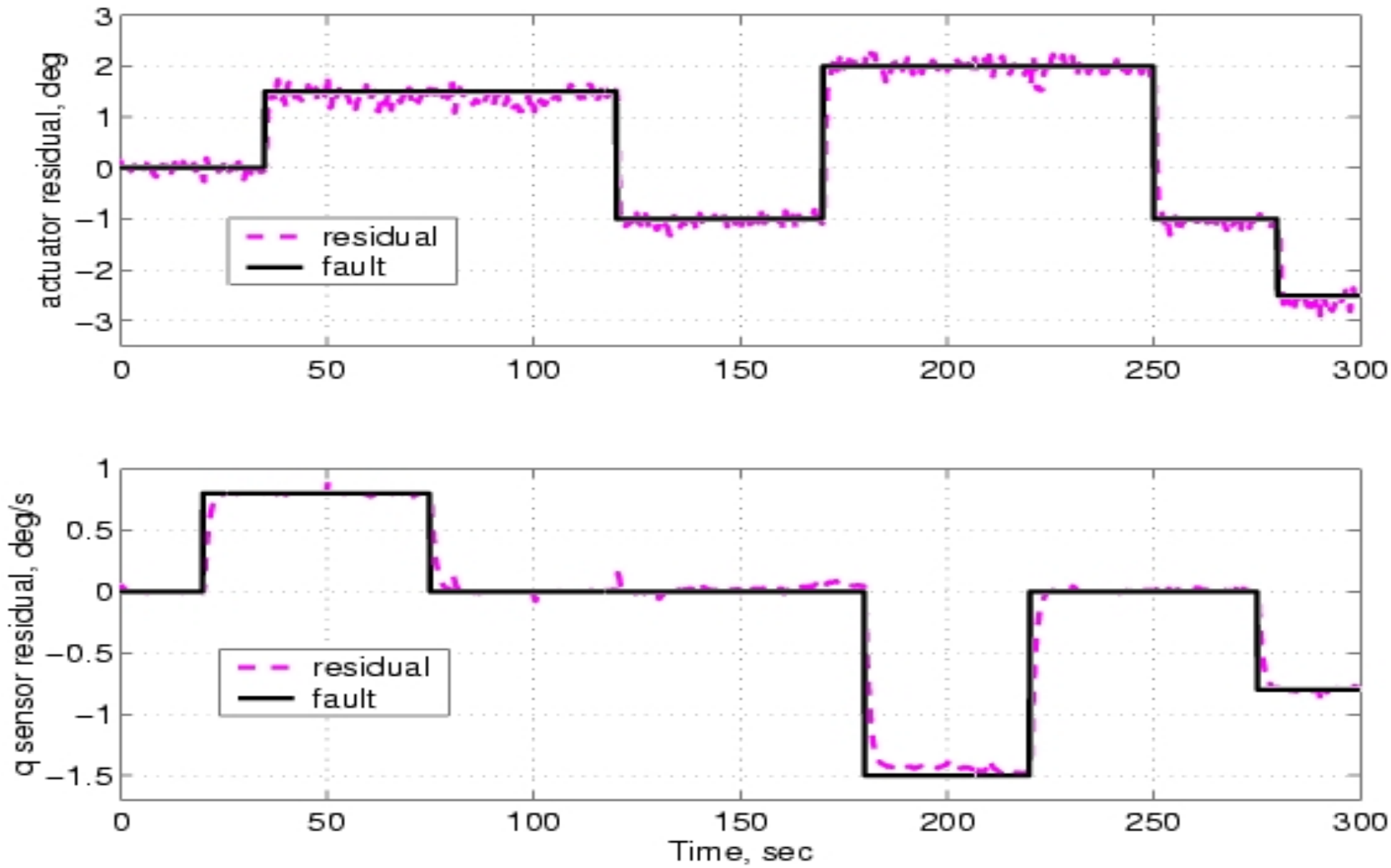

# FDI LPV Geometric

* Based on LTI dedicated filter geometric approach proposed by Massoumnia (PhD. Thesis, MIT, 1986.)

* Use of geometric concepts: (C,A) Invariant and Unobservability subspaces to provide conditions for separability and mutual detectability of the failures.

* Extension to Linear Parameter Varying (LPV) systems to account for plant variations and flight condition.

* Filter stability based on LPV stability theory.

# FDI LPV Geometric ( Objectives )

## Fundamental Problem of Residual Generation (FPRG) :

Consider a system with fault model:

$$\dot{x} = A x + B u + L_1 \nu_1 + L_2 \nu_2 \qquad \nu_i := \text{fault signal}$$

$$y = C x \qquad L_i := \text{fault signature}$$

Design residual generator sensitive to $L_1$ and insensitive to $L_2$.

$$\nu_1(t) \neq 0 \Rightarrow r(t) \neq 0$$

$$\nu_2(t) \neq 0 \Rightarrow r(t) = 0$$

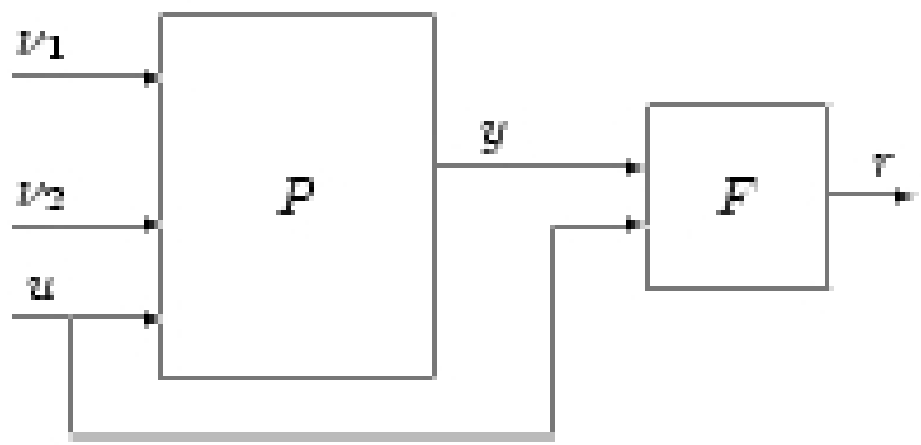

# FDI LPV Geometric ( Experimental Setup )

Design LPV FDI filter based on Open-Loop model.

LPV model including elevon and throttle failure:

$$\dot{x}(t) = A(\rho)\, x(t) + B(\rho)\, u(t) + L_{el}(\rho)\, \nu_{el}(t) + L_T\, \nu_T(t)$$

$$y(t) = C\, x(t),$$

where $\rho_i$ are the scheduling variables and

$$A(\rho) = A_0 + \rho_1 A_1 + \ldots + \rho_9 A_9$$

$$B(\rho) = B_0 + \rho_1 B1 + \ldots + \rho_9 B_9$$

$$L_{el}(\rho) = \rho_1 b_{\{el,1\}} + \rho_6 b_{\{el,6\}} + \rho_8 b_{\{el,8\}}$$

$$L_T = b_{\{T,0\}}.$$

# FDI LPV Geometric ( Results I )

**Closed-Loop Nonlinear simulation: Plant responses (solid); Commands (dashed).**

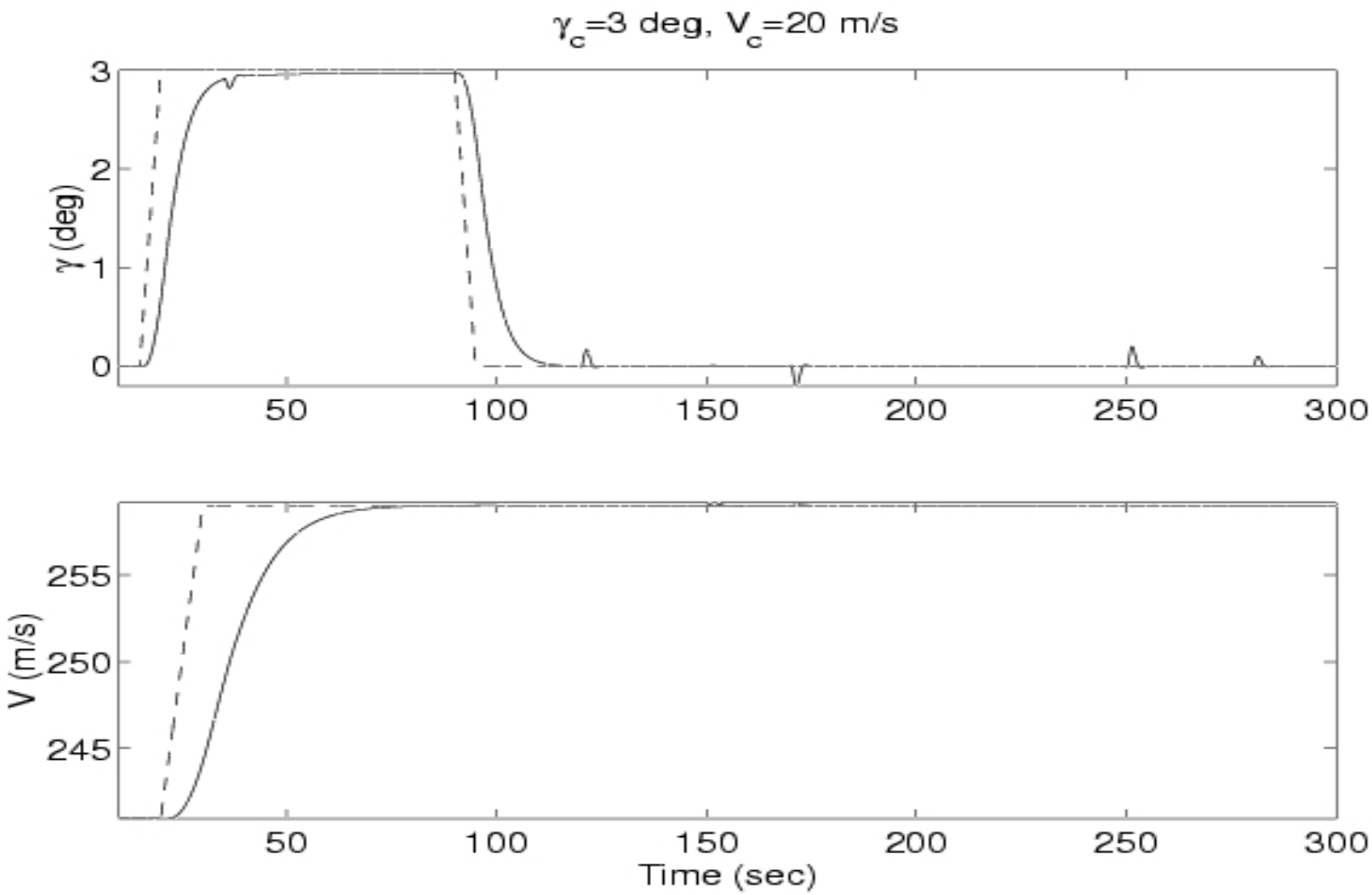

# FDI LPV Geometric ( Results II )

**Closed-Loop Nonlinear simulation: Residuals (solid); Faults (dashed).**

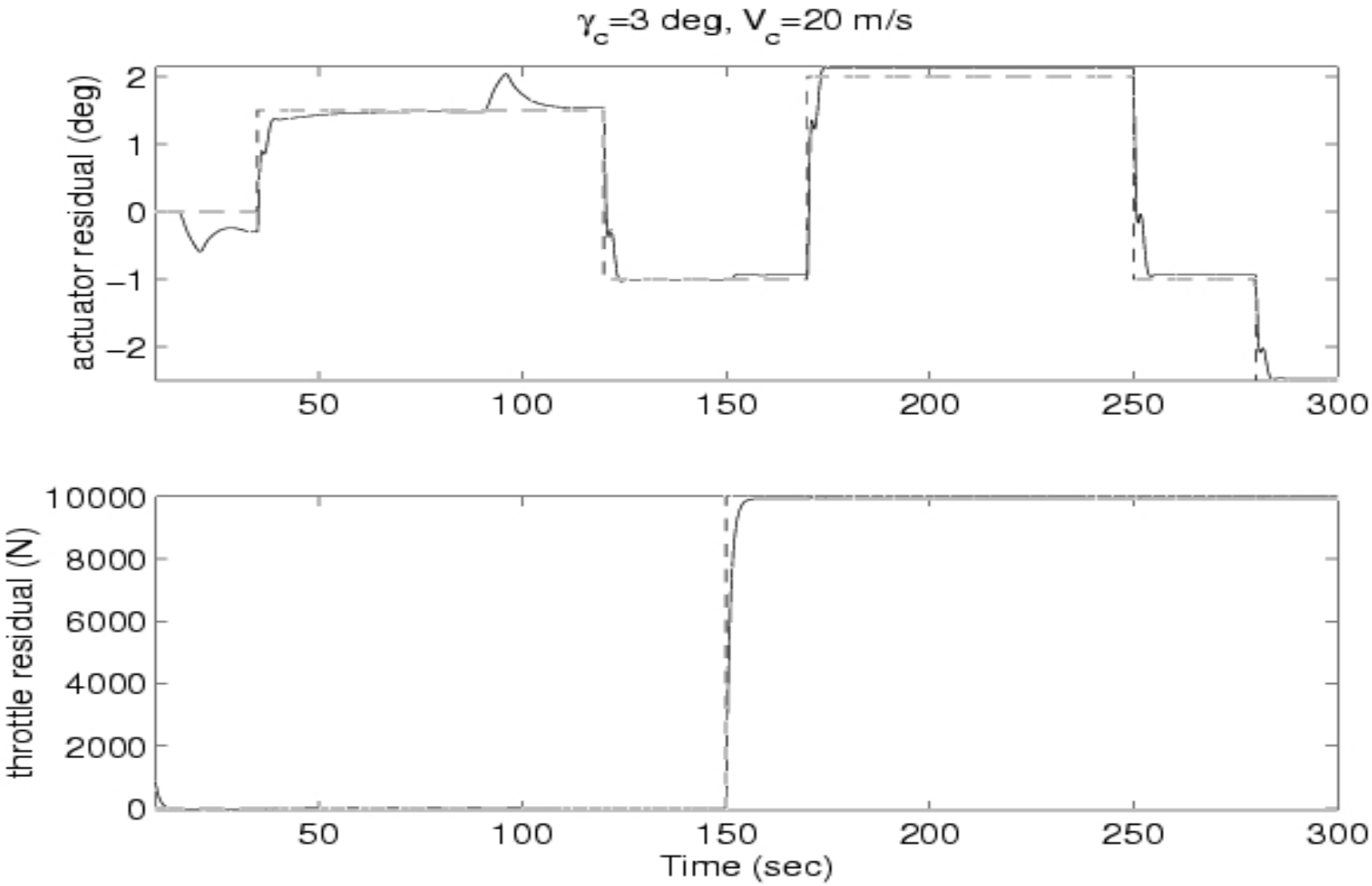

# FTC LPV

**General Characteristics of the method:**

* Off-line active reconfiguration approach.
* Results in a single MIMO controller with stability and robustness guarantees for the LPV closed-loop system.

**Particular characteristics of our approach:**

* Design reconfigurable controller for elevator actuator failure using a dissimilar hardware strategy (control allocation).
* Decoupled tracking of flight path angle (FPA) and Velocity (V) with disturbance rejection.

# FTC LPV ( Experimental Setup )

Scheduling parameters: velocity ( $V \in [184,280]$ m/s ),
altitude ( $he \in [4000, 8500]$ m ),
fault diagnostic signal ( $f \in [0,1]$ ).

Controller designs: no fault ( $K_{NF}$ , f=0 ),
elevator failure ( $K_F$ , f=1 ),
reconfigurable ( $K_R$ , $f \in [0,1]$ ).

Simulation Fault models: elevator-lock ( $\delta_{el}$ = cte ),
elevator-float ( $\delta_{el}$ = angle of attack ).

# FTC LPV ( Interconnection )

**Interconnection for reconfigurable controller synthesis**

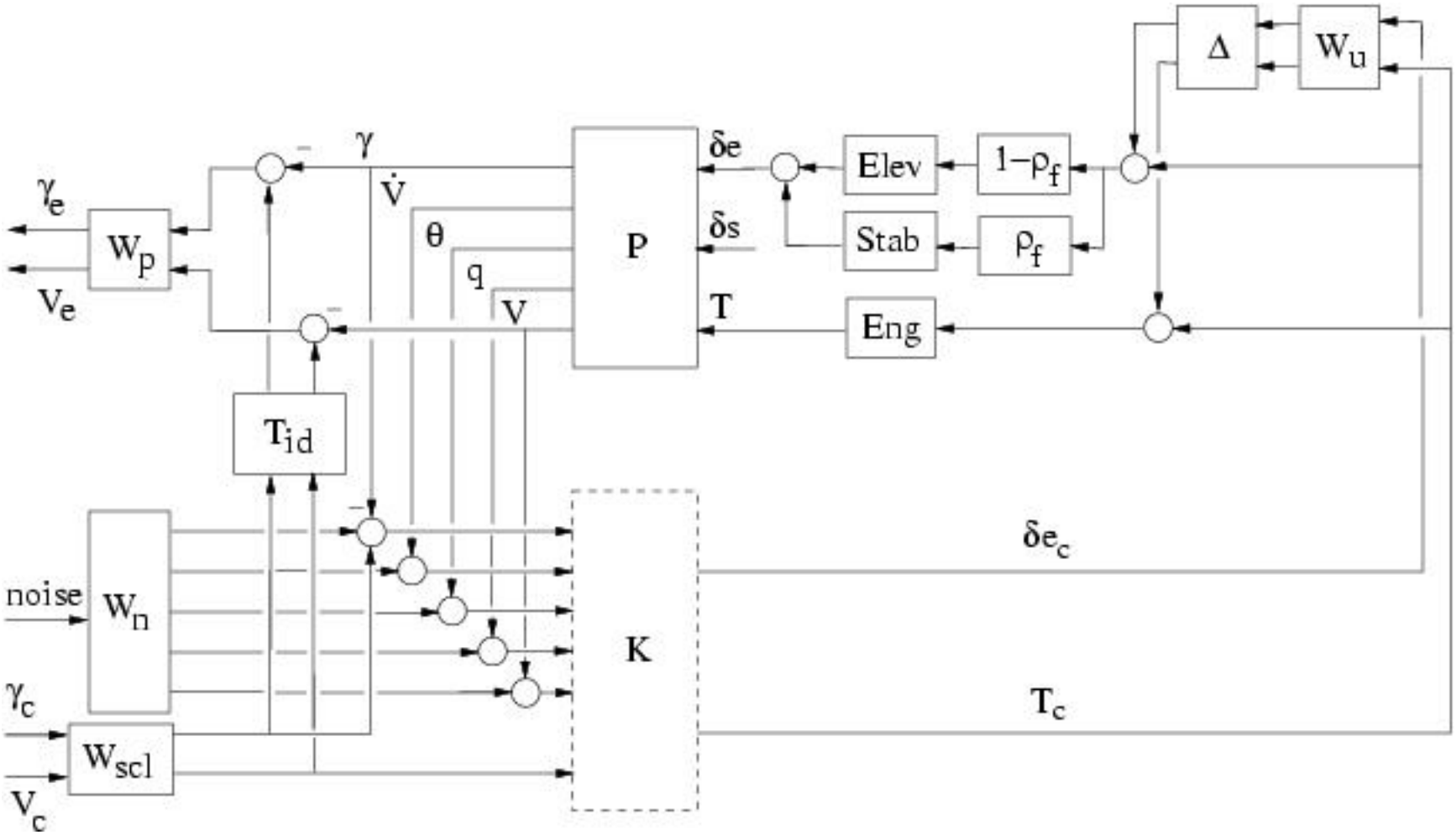

# FTC LPV ( Results I )

**Aircraft responses with reconfigurable controller for elevator-lock at 10 sec :**
**Commands (blue dashdot); No-Fault System (green solid); Faulty System (red dashed).**

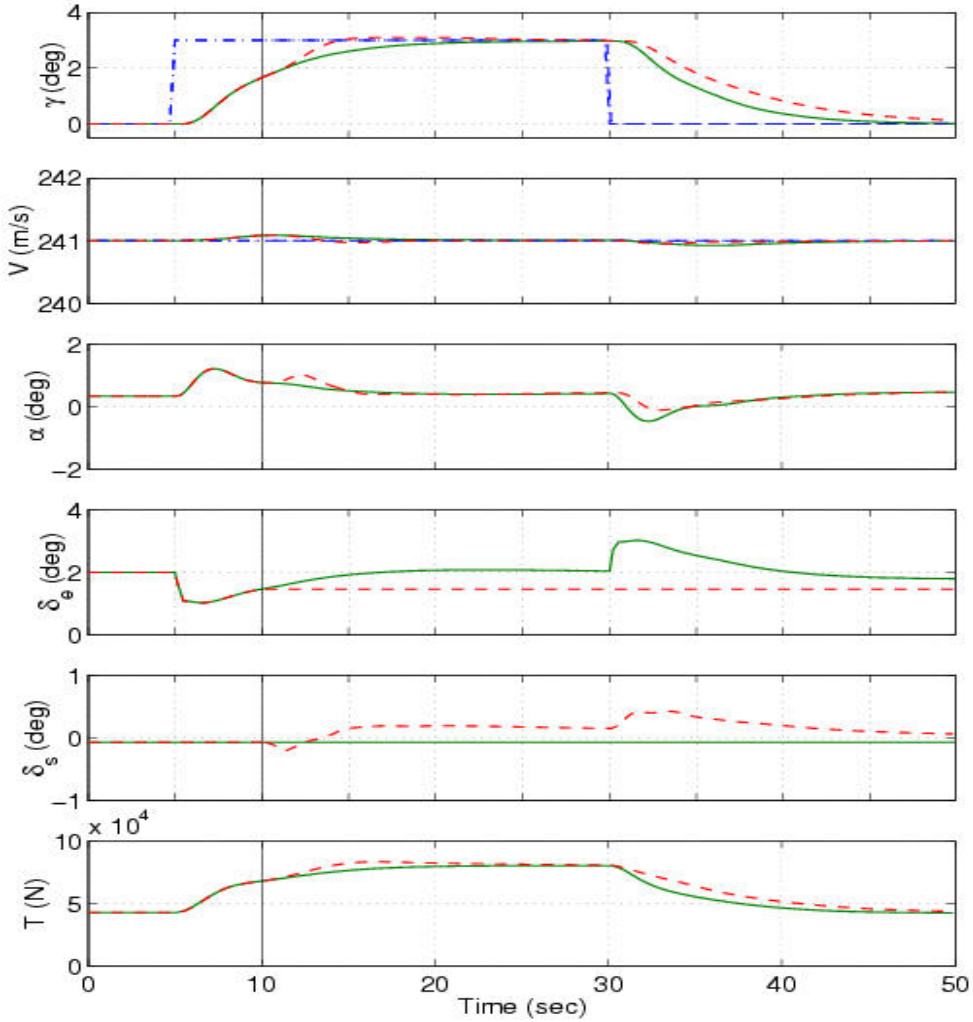

# FTC LPV ( Results II )

**Aircraft responses with reconfigurable controller for elevator-float at 10 sec :**
**Commands (blue dashdot); No-Fault System (green solid); Faulty System (red dashed).**

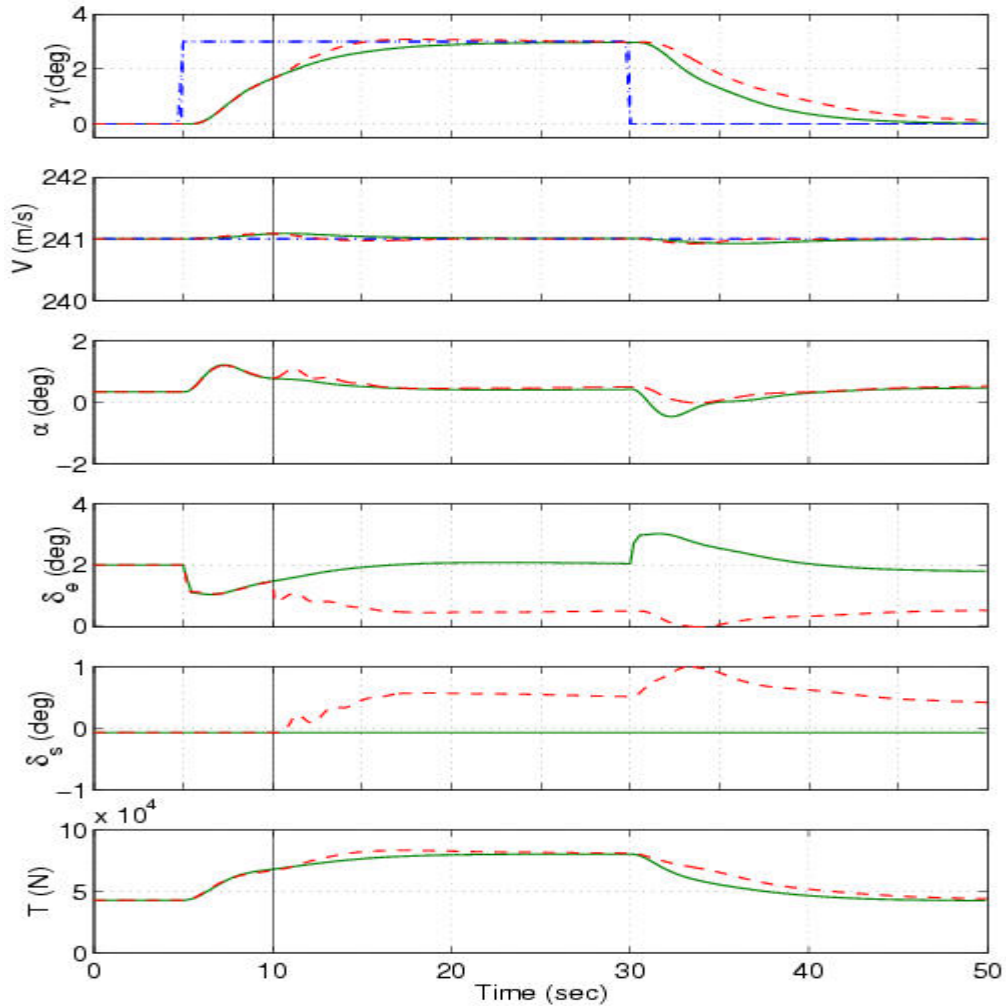

# Research Teams and Support

**University of Minnesota**:

Prof. Gary J. Balas, Subhabrata Ganguli, Andrés Marcos.

**Budapest University of Technology and Economics:**

Prof. József Bokor, István Szászi.

We gladly acknowledge support from:

NASA Langley Cooperative Agreement No. NCC-1-337 and our technical contract monitor Dr. Christine Belcastro.

Hungarian National Science Foundation (OTKA) under Grant T-030182.

# References

## FDI LTI $H_\infty$ :

* Marcos, A., Ganguli, S., Balas, G., "Application of H-infinity Fault Detection and Isolation to a Boeing 747-100/200," 2002 AIAA GNC Conference, Monterey, CA.

## FDI LPV Geometric :

* Szászi, I., Marcos, A., Balas, G., Bokor, J., "LPV Detection Filter Design for Boeing 747-100/200," 2002 AIAA GNC Conference, Monterey, CA.

## FTC LPV :

* Ganguli, S., Marcos, A., Balas, G., "Reconfigurable LPV Control Design for B-747-100/200 Longitudinal Axis," 2002 American Control Conference, Anchorage, AK.

Web-page: **http://www.aem.umn.edu/people/students/marcosa/home.html**