OpenGL Rendering Pipeline and Programmable Shaders

Topics

- Rendering Pipeline
- Shader Types
- OpenGL Shader Language Basics

Pipeline:

An organization for software and hardware which defines a fixed sequence of stages. Each stage carries out some operation, receiving its input data from the prior stage and providing its output data to the next stage. The order of data in the pipeline cannot change.

Rendering Pipeline:

An organization for the set of steps needed to convert a set of vertices into a frame buffer image.

The term rendering pipeline might be used generically ...
... or it might refer to something very specific.

"Clipping is the most tedious step in the rendering pipeline.".

OpenGL Rendering Pipeline:

The sequence of steps defined by OpenGL...
... that start with a vertex and its attributes ...
... and usually result in the frame buffer being written.

Rendering Pass:

The use of the rendering pipeline to render some set of primitives.

OpenGL Rendering Pipelines

Defined by the OpenGL standard. Current is 4.5.

Definitions

Stage:
A pipeline section.

Programmable Stage (or Unit):
An OpenGL RP stage which can perform its operation by executing user-provided software.

Fixed-Function Stage (or Unit):
An OpenGL RP stage which cannot be programmed, it's functionality is specified by the standard and provided by the implementation.

Shader:
A program set up to run in a programmable stage, or the programmable stage itself.

Simplified OpenGL Rendering Pipeline

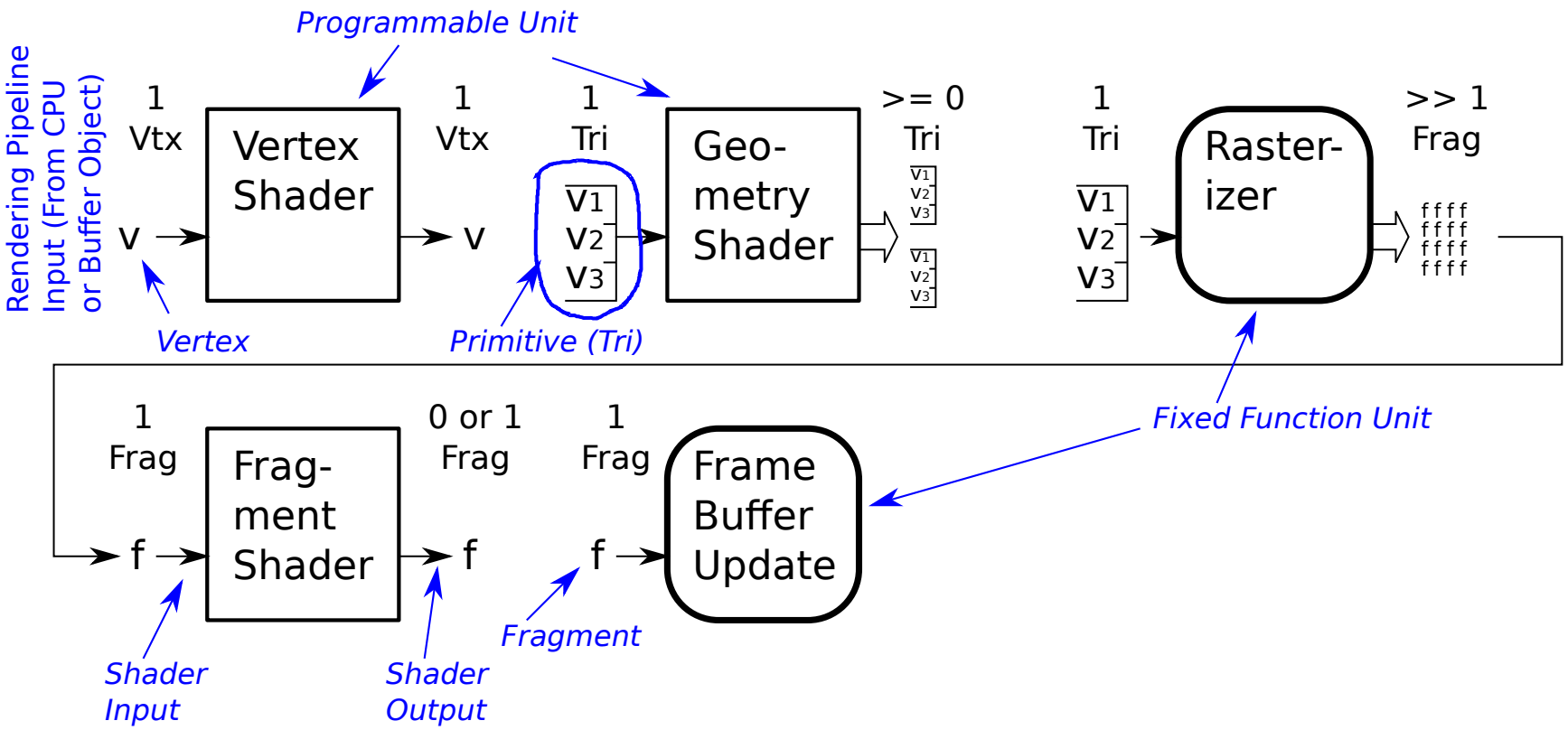

Rendering Pass

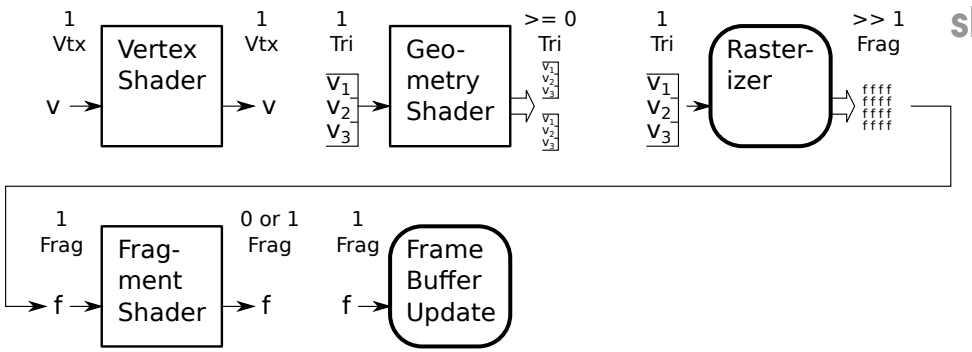


```
glBegin(GL_TRIANGLE_STRIP);
glColor3fv(lsu_spirit_gold);
for ( int i=0; i<size; i++ )
    glNormal3f(norms[i].x,norms[i].y,norms[i].z);
    glVertex3f(coords[i].x,coords[i].y,coords[i].z); }
glEnd();
```

The execution of `glBegin` starts a rendering pass.

Commands such as `glDraw` also start rendering passes.

The rendering pass is complete after `glEnd` finishes.

During the rendering pass the CPU sends vertices into the start of the rendering pipeline ...

... which results in the frame buffering being updated at the RP end.

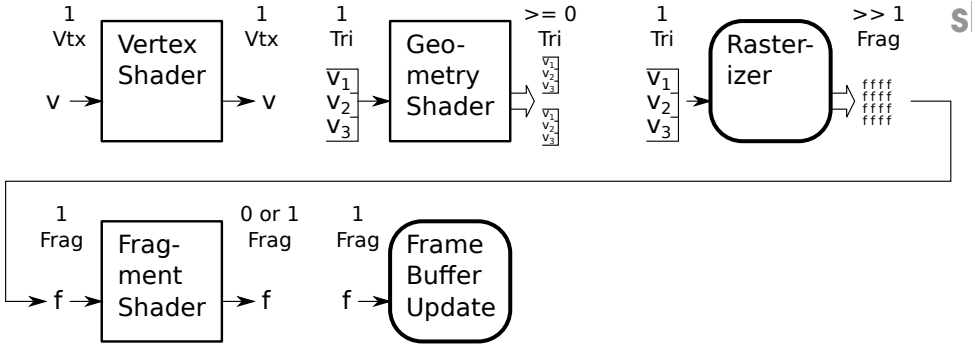

Vertex Shader Inputs

```
glBegin(GL_TRIANGLE_STRIP);
glColor3fv(lsu_spirit_gold);
for ( int i=0; i<size; i++ )
    glNormal3f(norms[i].x,norms[i].y,norms[i].z);
    glVertex3f(coords[i].x,coords[i].y,coords[i].z); }
glEnd();
```

Each vertex in this example has the following attributes:

A coordinate (specified by glVertex3f).

A normal (specified by `glNormal3f`).

A color (specified by `glColor3fv`).

Each execution of `glVertex3f` sends one vertex into the vertex shader.

In the diagram a vertex, including all its attributes, shown as `v`, `v1`, etc.

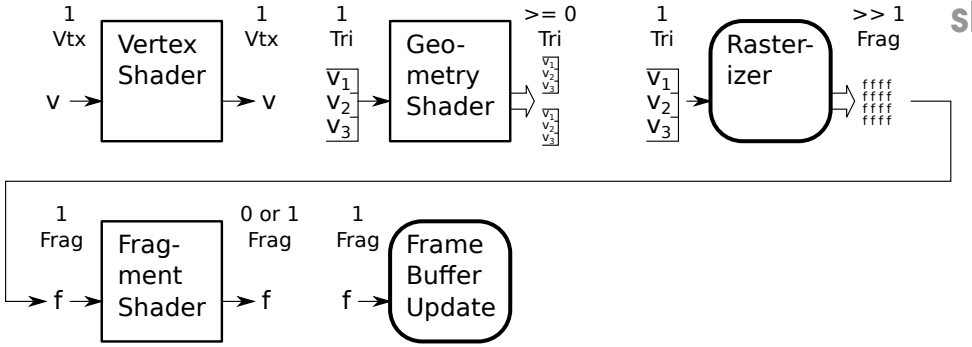

The Vertex Shader

Input: One vertex.

Output: One vertex.

Historical Role:

Compute lighted color of vertex.

Convert object-space coordinates to clip space.

Current Role:

Provide data for geometry shader (completely user determined).

If no geometry shader, output must include clip-space coordinates.

The Geometry Shader

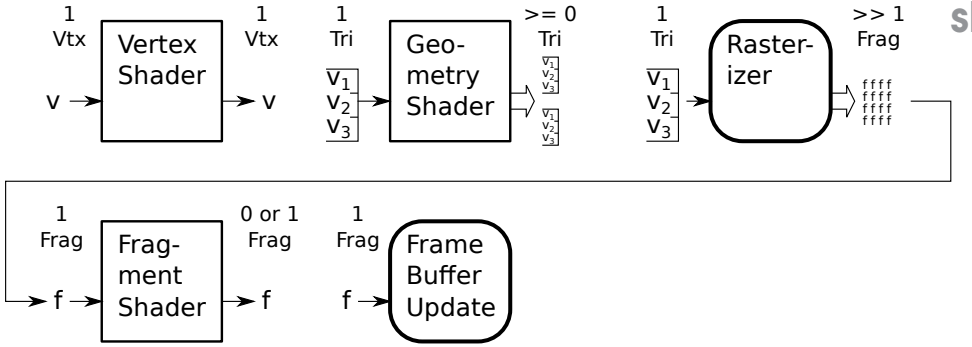

Input: One primitive.

Output zero or more primitives.

Input primitive type must be compatible with primitive specified by `glBegin` or `glDraw`.

Input data is an array of vertex shader outputs . . .
. . . the size of the array is determined by primitive type.

Output primitive type can be freely chosen.

Current Role:

Must write clip-space coordinates to `gl_Position`.

Also writes whatever other data fragment shader needs.

Rasterizer

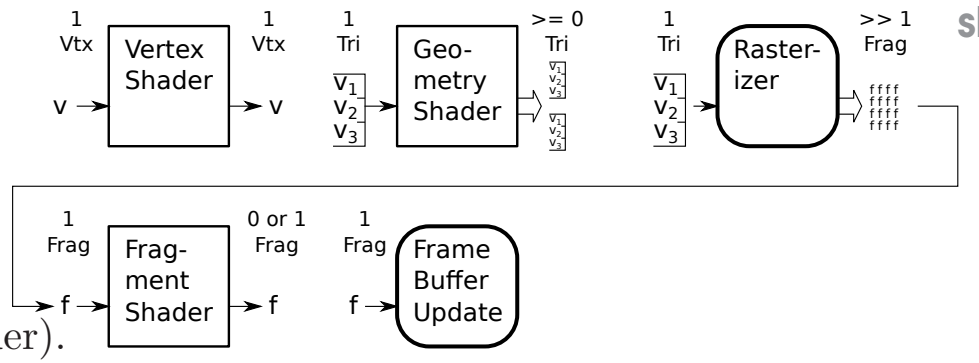

Input: One primitive ...
... (type determined by geometry shader).

Output: Zero or more fragments—one fragment for each pixel that the primitive covers.

The data for each fragment is some combination of the data ...
... for each vertex in the input primitive.

The rasterizer cannot be programmed.

Fragment Shader

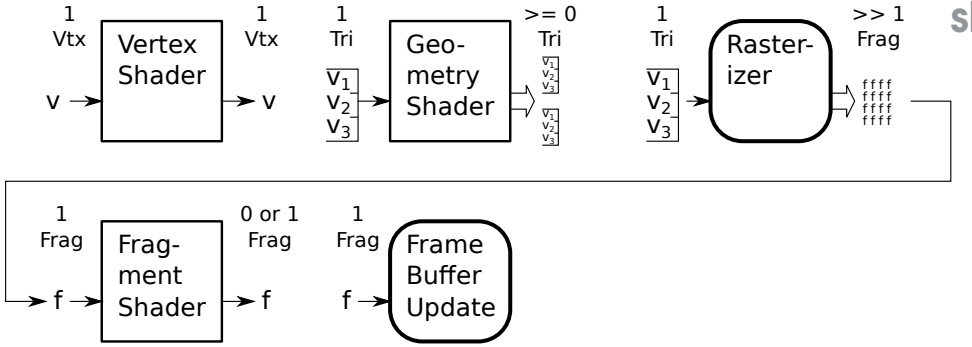

Input: One fragment.

Output: Zero or one fragments.

Typical Role:

Read texels and blend with lighted color.

Frame Buffer Update

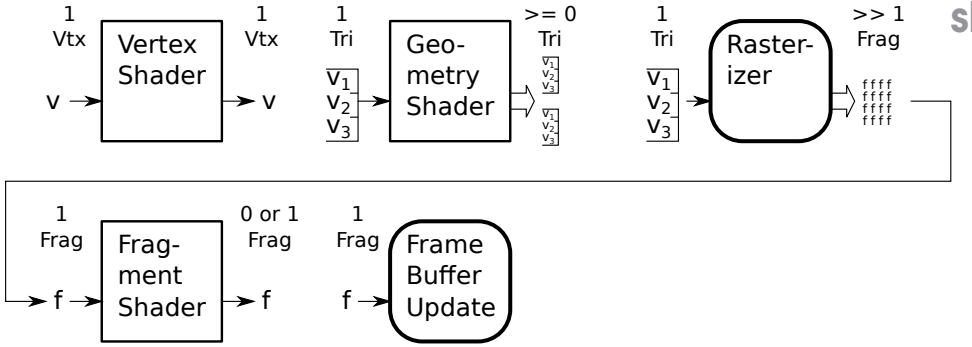

Input one fragment. Output: None.

Typical Role

Applies depth, stencil, and other tests to fragment.

Blends or writes passing fragment to color plane of frame buffer.

Frame buffer update is not programmable.

Data Access by Shaders

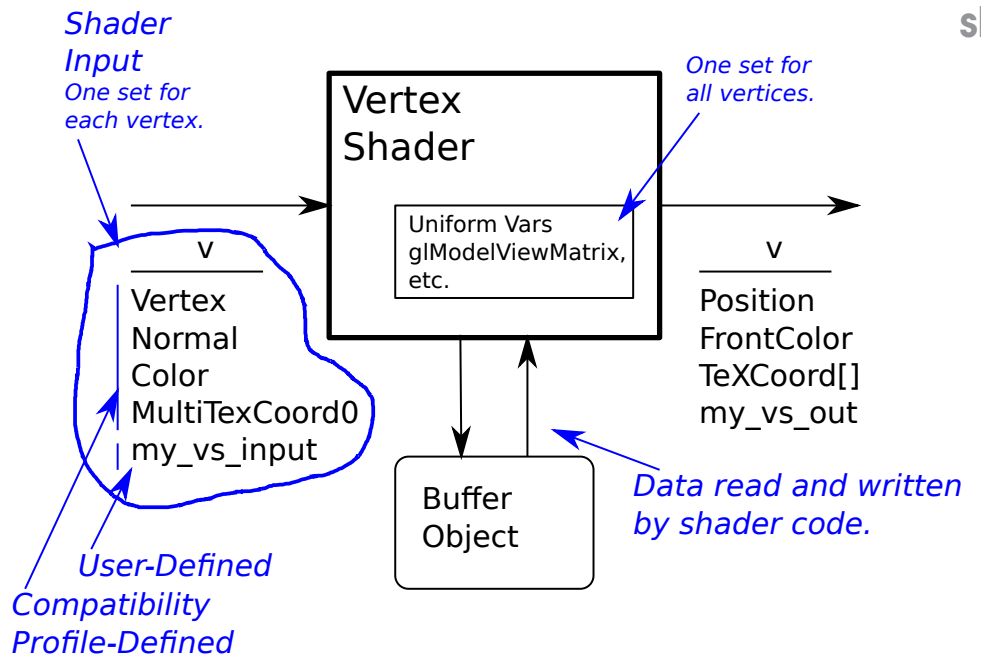

Categories

Shader inputs and outputs.

Uniform variables.

Buffer objects.

Shader Inputs and Outputs

One set of data **for each** vertex, primitive, or fragment.

To avoid waste, should not include values common to all.

For example, don't make color a shader input if all vertices are the same color, use a uniform instead.

Data Access by Shaders

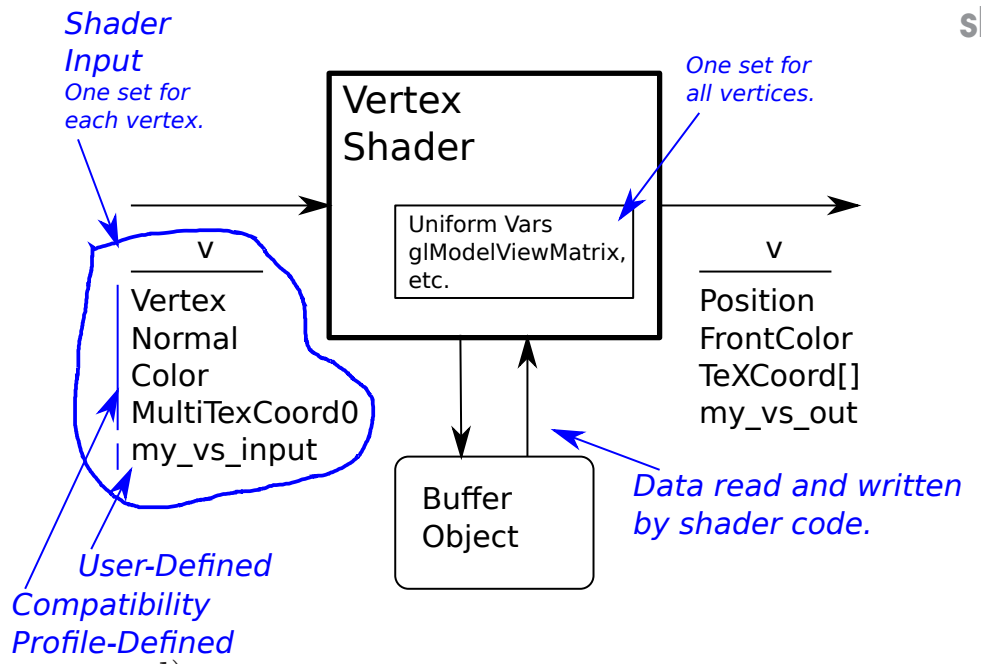

Uniform Variables

- One set of data shared by all.
- Read only.
- Size is limited, typically 64 kiB.
- Usually cached (especially if < 8 kiB accessed).

Data Access by Shaders

Buffer Objects

Shared by all...
... (vertices, primitives, fragments).

Can be read and written,...
... typically as an array.

Size is large.

Usually not cached.

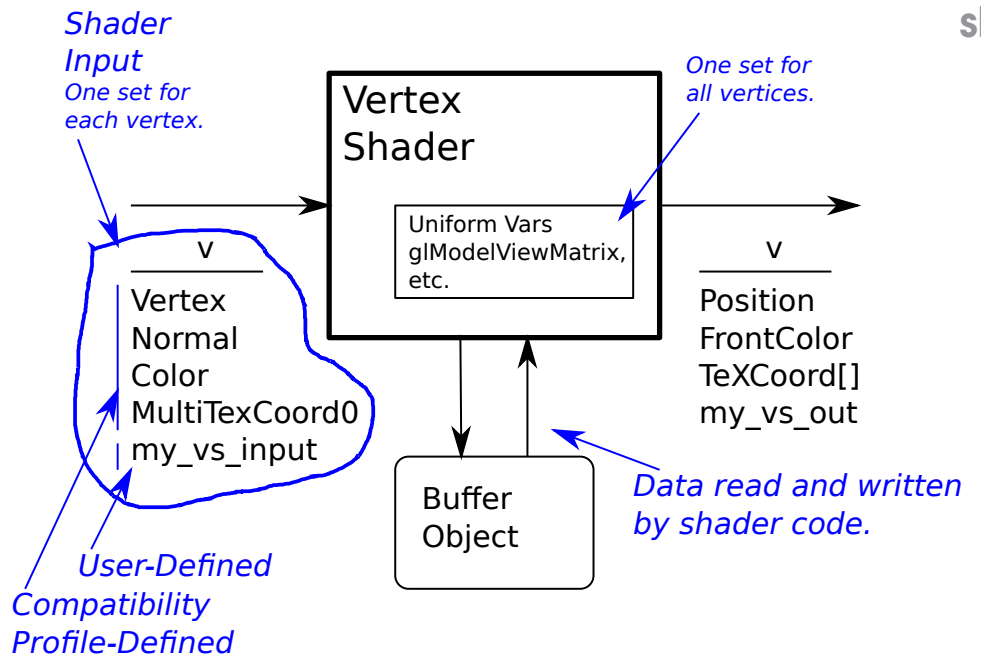

OpenGL Shaders

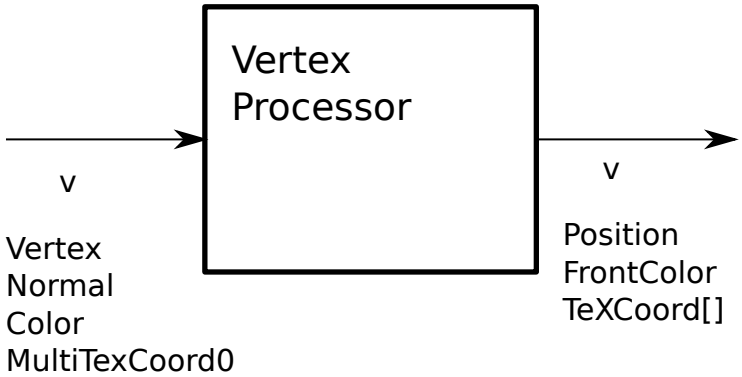

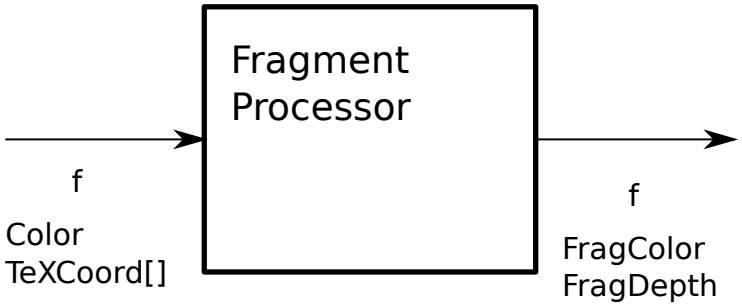

Major Rendering Pipeline Steps

Preparation

These activities are performed before invoking pipeline.

CPU specifies transforms, material properties, etc.

Calling, say, `glTranslatef`, helps set up pipeline...
... but does not start it running or feed it data.

Feed Data to Pipeline

Data enters in a unit including a vertex and its attributes.

This initiates the steps.

Vertex Processing Steps (By GPU for each vertex.)

- *Apply modelview transform to vertex.*

  Main result is vertex coordinate in eye space.

- *Compute lighted color of vertex.*

  Main result is lighted color.

- *Apply projection transform to eye-space vertex.*

  Result is vertex coordinate in clip space.

Primitive Assembly Steps

These steps operate on a primitive (a group of primitives).

- *Primitive Assembly (Group vertices into a primitive).*

  Result is, say, a group of 3 describing a triangle.

- *Clip (remove) off-screen parts of primitive.*

  Result is fewer and maybe different primitives.

- *Rasterize*

  Result is the set of fragments (fb locations) covered by primitive.

Fragment Processing Steps

These steps operate on a fragment.

- *Fetch texels, filter and blend.*

  Result is a frame-buffer ready color.

- *Frame Buffer Update*

  If fragment passes depth and other tests, write or blend.

Programmable Units

Programmable Unit:

Part of the pipeline that can be programmed (as defined by some API).

Choice of what is and isn't programmable constrained by:

Need to allow for parallel (multithreaded, SIMD, MIMD) execution.

Simple memory access.

Major OpenGL Programmable Units

Vertex Processor:

Transform vertex and texture coordinates, compute lighting.

Geometry Processor:

Using a transformed primitive and its neighbors generates new primitives. For example, replace one triangle with many triangles to more closely match a curved surface.

Fragment Processor:

Using interpolated coordinates, read filtered texels and combine with colors.

Languages

Shader:

A programmable part of a GPU. The name "shader" is now misleading but is still in common use.

Shader Language:

An language for programming shaders.

High-Level Shader Languages

OpenGL Shader Language

OpenGL standard.

Syntax very similar to C.

Language designed for vertex and fragment shaders.

Cg

Originated with ATI, adopted in Direct3D.

Syntax very similar to C.

Language designed for stream programs . . .
. . . geometry, vertex, and fragment programs can be in stream form.

OpenGL Shader Language Important Features

C-like

CPP-like preprocessor directives.

Library of useful geometry functions.

Includes vector and matrix types and operators.

OGSL Data Types Example

Example

```
vec4 vertex_e = gl_ModelViewMatrix * o_point;
vec3 norm_e = gl_NormalMatrix * gl_Normal;
vec4 light_pos = gl_LightSource[1].position;
float phase_light = dot(norm_e, normalize(light_pos - vertex_e).xyz);
float phase_user = dot(norm_e, -vertex_e.xyz);
float phase = sign(phase_light) == sign(phase_user) ? abs(phase_light) : 0.0;
```

OGSL Storage Qualifiers

Storage Qualifiers

Used in a variable declaration, specifies where data stored.

Below, `in`, `uniform`, `constant`, and `out` are storage qualifiers.

```
in vec4 force;          // Input to this shader, different for each primitive.
uniform float x;        // Input to shader, value rarely changed.
const int sides = 5;    // Can never be changed.
out vec2 nudge;         // Output of this shader (input to some other).
```

Storage Qualifier Types

uniform:

Read-only by shader. Written by client, change is time consuming.

Typical use: transformation matrices.

in:

Input to shader. Read-only by shader that made the `in` declaration. Value is set either by client (using `glVertexAttrib` and friends) or by a prior stage shader (by writing an `out` variable.

Typical uses: vertex material properties (color), normal.

out:

Output of shader. Value is written by shader in which `out` declaration appears and read by shader in subsequent stage.

sampler:

Read-only by vertex and fragment shader. A handle to a texture unit, used by texture access functions.

Interpolation Qualifiers

Used for fragment shader inputs.

Specify how value should be interpolated.

flat:
No interpolation.

smooth:
Perspective-correct interpolation.

noperspective:
Linear interpolation.

Deprecated Storage Qualifiers.

These were used in earlier versions of OGSL.

They have been replaced by `in` and `out`.

attribute:
Deprecated. Like an `in` but only can be used for vertex shader.

varying:
Deprecated. When used in a vertex shader is the same as `out`, when used in a fragment shader is the same as `in`.

Storage Qualifier Example

```
// For vertex and fragment shaders:

uniform vec3 gravity_force;
uniform float gs_constant;
uniform vec2 ball_size;

// Vertex Shader Only

in float step_last_time;
in vec4 position_left, position_right, position_above, position_below;
in vec3 ball_speed;

out vec4 out_position;
out vec3 out_velocity;

// Fragment Shader Only
//
in vec4 out_position;
in vec3 out_velocity;
```

OGSL Functions

Function Parameters

OpenGL Shading Language 1.30 Section 4.4

Call by value.

Parameter Qualifiers:

- in (default)
- out
- inout

Built In Functions

See OpenGL Shading Language 1.30 Section 8

OpenGL Shading Language Use

Steps for adding a typical shader to existing OpenGL code:

Define what the shader is supposed to do.

Identify appropriate programmable units (vertex, geometry, fragment, etc).

Identify data that shaders will use.

- If data from client (CPU) determine whether attribute or uniform.
- For attributes and uniforms, determine if pre-defined or user-defined.

Write shader code.

In CPU code follow steps for installing shader. (*E.g.*, use `pShader`).

Get names of any new uniforms and attributes.

As necessary, initialize uniforms and attributes.

Turn shader on and off as necessary.

Example—Phong Shader

Phong Shader:

A lighting model in which the lighted color is computed at each fragment. (Otherwise the lighted color is computed at each vertex of a primitive and those lighted colors are interpolated across the fragments.)

Phong Shader Steps

- *Define what shader does.*
  Computes lighting at fragment using interpolated normal...

- *Identify appropriate units.*
  For computing lighting: fragment shader.

  For passing along normal and color info, vertex shader.

- *Identify data that shaders use.*
  VS: Lighting data, normal. (All pre-defined.)

  FS: Normal (interpolated), eye-space vertex coordinates. User def.

OpenGL Calls, from Initialization to Use (See OGL 4.3 Chapter 7)

Create Program Object (Once)

```
pobject = glCreateProgram()
```

For Each Shader (Vertex, Geometry, Fragment, etc.):

Create Shader Object

```
sobject = glCreateShader(GL_VERTEX_SHADER)
```

Provide Source Code to Shader Object and Compile

```
glShaderSource(sobject,1,&shader_text_lines,NULL);
glCompileShader(sobject);
```

Attach

```
glAttachShader(pobject,sobject);
```

Link (Once)

```
glLinkProgram(pobject);
```

Use (Many Times, *e.g.*, once per frame.)

```
glUseProgram(pobject);
```

Obtaining and Using Variable References

At run time variables identified by number.

At Initialization get **location** (index) of attributes and uniforms:

```
vsal_pinnacle = glGetAttribLocation(pobject,name);
sun_ball_size = glGetUniformLocation(pobject,name);
```

During Render (Infrequently) Change Uniform Value (Using location)

```
glUniform2f(sun_ball_size,ball_size,ball_size_sq);
```

During Render (Per Vertex Okay) Change Attribute Value (Using location)

```
glVertexAttrib4f(vsal_pinnacle,pinnacle.x,pinnacle.y,pinnacle.z,radius);
```

Done before each glVertex.

Same options as vertex, such as client and buffer object arrays.